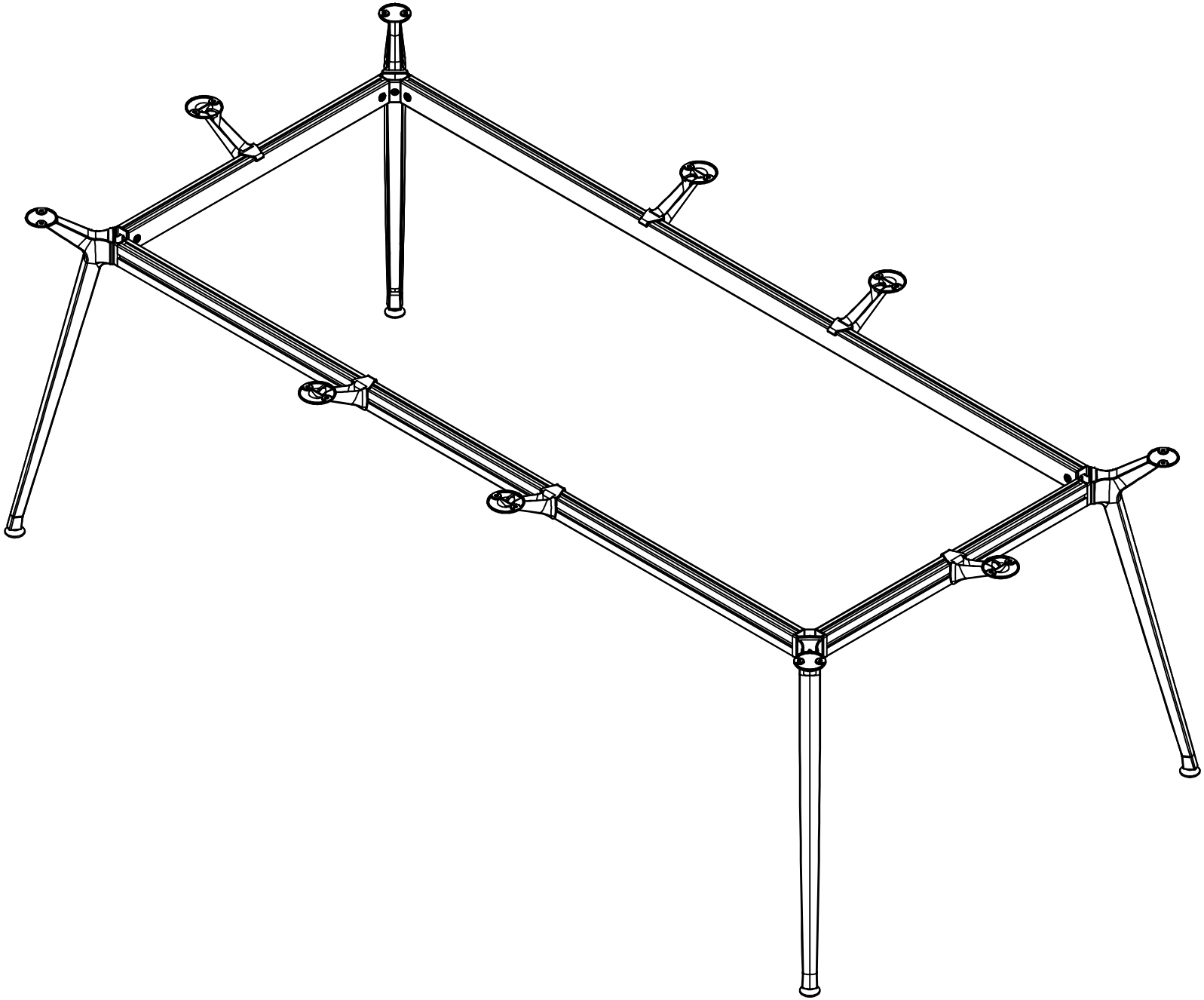

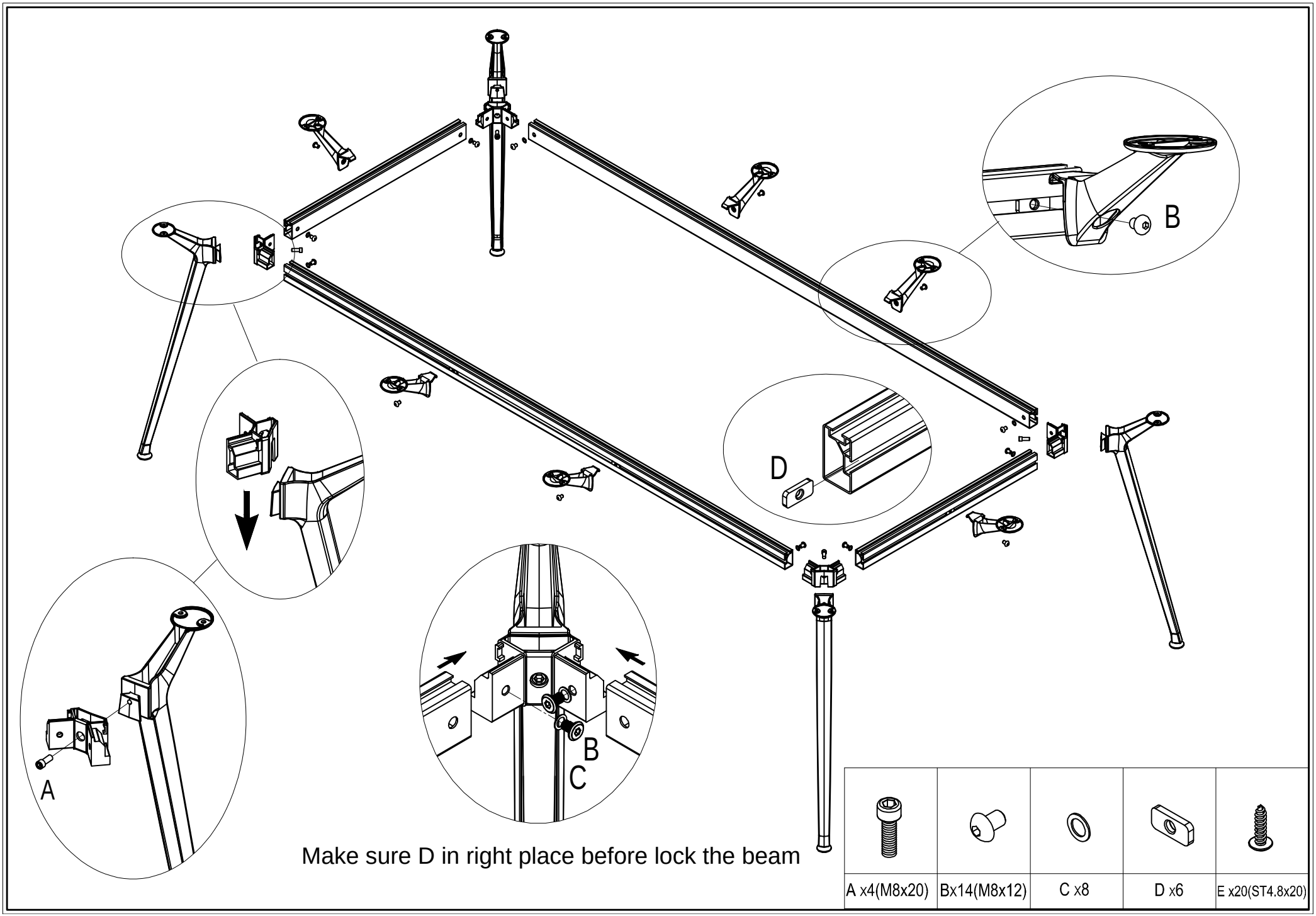
B
D
A
B
C
Make sure D in right place before lock the beam
A x4(M8x20)
Bx14(M8x12)
C x8
D x6
E x20(ST4.8x20)